DATALOGIC

TL46

High performance contrast sensor for colored registration mark detection

- Fastest and accurate low jitter model (TL46-WJ)
- Wide-spectrum RGB or white LED emission
- 4 different models: basic, standard, enhanced, low jitter
- Automatic, manual and dynamic settings
- 15, 20, 30 or 50 kHz switching frequencies
- Very low jitter down to 7µs (TL46-WJ...)
- NPN/PNP and analog outputs
- Standard mounting, M12 connector rotatable to 5 positions

SENSORS

APPLICATIONS

-Packaging and labeling machinery
-Beverage/Food/Cosmetic/Pharmaceutical industries
-Printing machinery
-Flexographic printing machinery

(*) ATEX II 3DG

TL46		
Contrast sensor		9 ±3 mm 18 mm (Lens No.18 glass) 22 mm (Lens No.22 glass) 28 mm (Lens No.28 glass) 40 mm (Lens No.40 glass)
Switching frequency		15 kHz 20 kHz 30 kHZ 50 kHZ
Jitter		< 7µs (TL46-WJ) 16µs (TL46-WLF) >25µs (TL46-W/WL)
Light emission		RGB LED white LED Red LED
Setting		push buttons trimmer
Power supply	Vdc	10...30 V
	Vac	
	Vac/dc	
Output	PNP	▪
	NPN	▪
	NPN/PNP	▪
	relay	▪ (see Technical Data Table)
	other	0...5 V Analog Output
Connection	cable	▪ (see Technical Data Table)
	connector	▪
	pig-tail	
Approximate dimensions (mm)		31x81x58
Housing material		Aluminium
Mechanical protection		IP67

Contrast Sensors - TL46

DATALOGIC

TECHNICAL DATA	
Power supply	10 ... 30 Vdc (limit values)
Ripple	2 Vpp max.
Consumption (output current excluded)	40 mA max. at 24 Vdc (mod. TL46-A) 50 mA max. at 24 Vdc (mod. TL46-W/WJ) 85 mA max. at 24 Vdc 24 Vdc with bargraph ON in threshold adjustment mode, 55 mA max at 24 Vdc with bargraph OFF in normal functioning mode (mod. TL46-WL) 35 mA max. at 24 Vdc (mod. TL46-WLF)
Light emission	white LED 400-700 nm (mod. TL46-A-4xx) red LED 630 nm (mod. TL46-A-6xx) blu LED 465nm/green LED 520 nm/red LED 630 nm (mod. TL46-W/WL/WLF/WJ)
Detection Distance	9 ±3 mm 18 mm (Lens No.18 glass) 22 mm (Lens No.22 glass) 28 mm (Lens No.28 glass) 40 mm (Lens No.40 glass)
Minimum spot dimension	1,5 x 5 mm 0,8x4mm (TL46-WJ)
Depth of field	± 3 mm
Response time	33 µs (mod. TL46-W) 25 µs (mod. TL46-A/WL) 16 µs (mod. TL46-WLF) 10 µs (mod. TL46-WJ)
Switching frequency	15 kHz (mod. TL46-W) 20 kHz (mod. TL46-A/WL) 30 kHz (mod. TL46-WLF) 50 kHz (mod. TL46-WJ)
Jitter	7 µs (mod. TL46-WJ)
Setting	SET push-buttons (mod. TL46-W/WL/WLF) sensivity trimmer (mod. TL46-A)
Operating mode	DARK/LIGHT selection by switch (mod. TL46-A) automatic DARK/LIGHT selection (mod. TL46-W/WL/WJ) automatic DARK/LIGHT selection in the target/background detection, selectable via wire in the dynamic detection (mod. TL46-WLF)
Indicators	yellow OUTPUT LED green READY LED, orange DELAY LED and KEYLOCK (Mod TL46-W/WJ) green READY LED, 4-digit display/DELAY LED/KEYLOCK LED (mod. TL46-WLF) orange ARROWS (mod. TL46-A), DELAY LED and KEYLOCK LED 5-segment bargraph (mod. TL46-WL)
Dark/light selection	Switch Automatic Automatic/manual; remote/dynamic
Delay	0...20ms selectable via delay input 0...100ms programmed
Auxiliary function	Keylock Fine Hysteresis regulation
Indicators	
Output	PNP (mod. TL46-WJ); PNP or NPN; PNP/NPN (mod. TL46-W/WL/WLF); analog output (mod. TL46-A/W/WL)
Output current	100mA
Saturaton Voltage	=<2V
Analogue Out	0,5...5,5V ±10%; 2V on white target 90% 1...3V ±10%(white 90%) ; 5,5V max
Analogue out impedance	2,2 kΩ (short circuit protection)
Connection	M12 5-pole connector
Dielectric strength	500 Vac, 1 min between electronics and housing
Insulating resistance	>20 MΩ, 500 Vdc between electronics and housing
Electrical protection	class 2, double insulation
Protection device	Reverse polarity protection, overload and short circuit protection
Mechanical protection	IP67
Ambient light rejection	according to EN 60947-5-2
Vibrations	0,5 mm amplitude, 10 ... 55 Hz frequency, for every axis (EN60068-2-6)
Shock resistance	11 ms (30 G) 6 shock for every axis (EN60068-2-27)
Housing material	aluminium
Lens material	mirror (mod. TL46-A), glass (mod. TL46-W/WL/WLF/WJ)
Operating temperature	-10 ... 55 °C
Storage temperature	'-20 ... 70 °C
Weight	170 g max.

DIMENSIONS

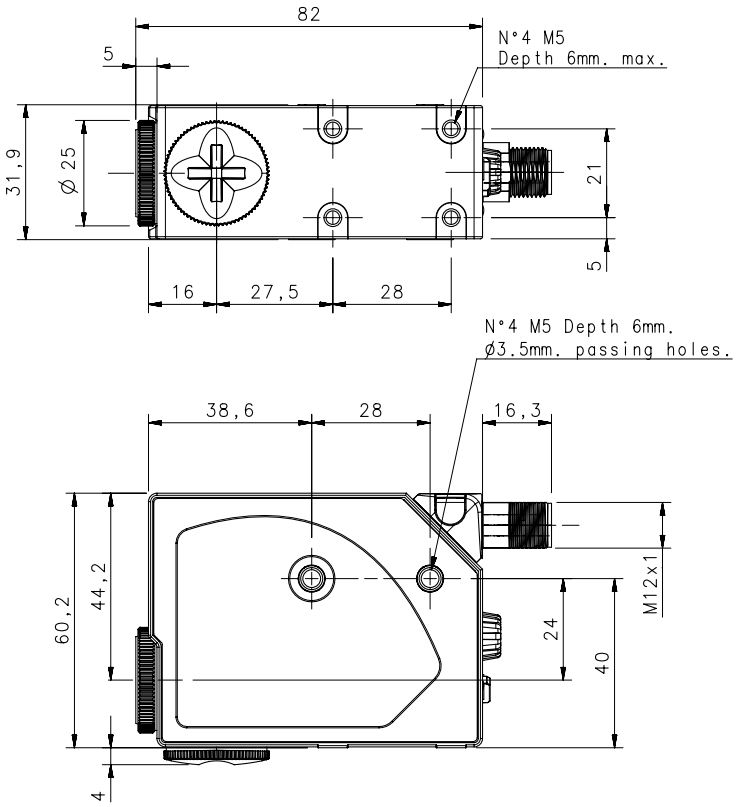

TL46-A

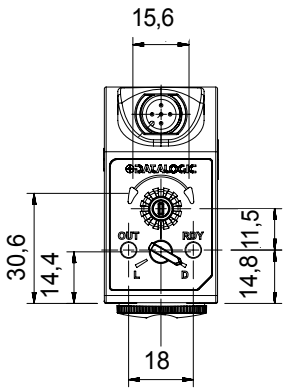

TL46-W/TL46-WJ

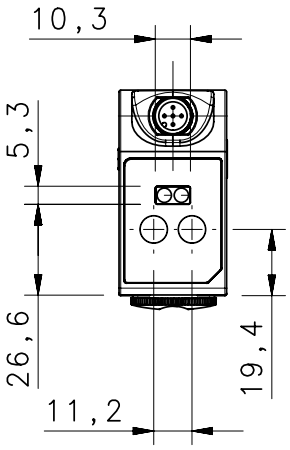

TL46-WL

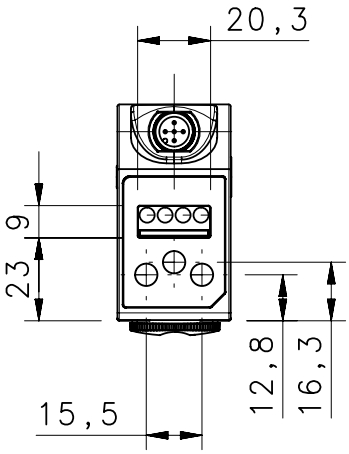

TL46-WLF

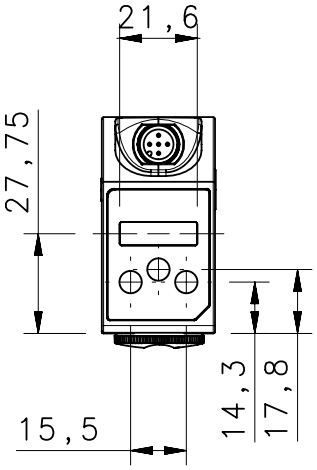

INDICATORS AND SETTINGS

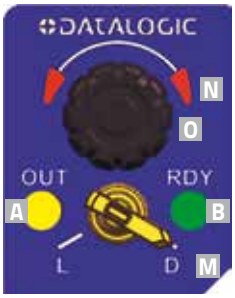

TL46-A TRIMMER

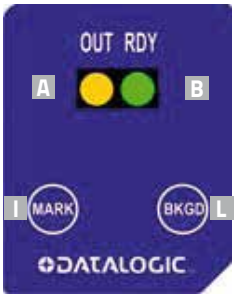

TL46-W BASE

TL46-WJ LOW JITTER

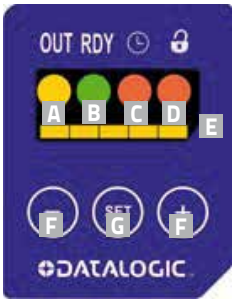

TL46-WL STANDARD

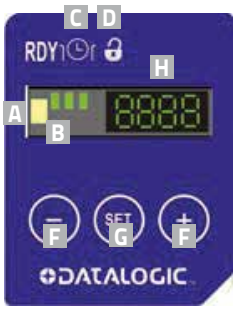

TL46-WLF ENHANCED

- A yellow OUTPUT LED
- B green READY LED
- C orange DELAY LED
- E orange KEYLOCK LED
- D Bargraph
- F +/- push-buttons
- G SET push-button
- H Display
- I MARK push-button
- L BKGD push-button
- M Light/Dark Switch
- N Orange Indicators Arrows
- O Sensitivity Adjustment Knob

CONNECTIONS

TL46-A

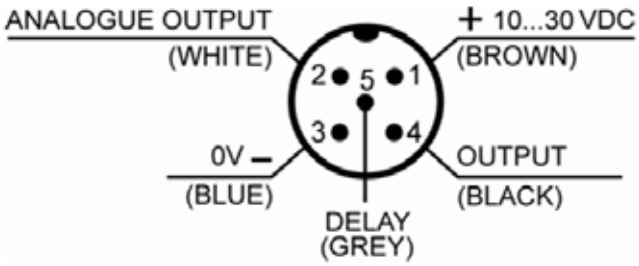

TL46-W/WL

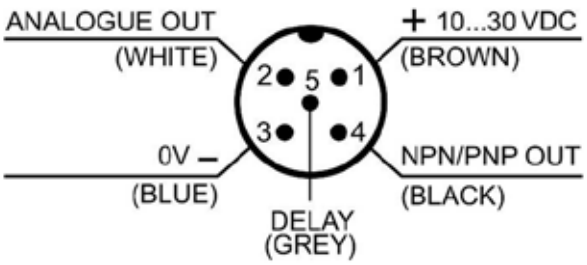

TL46-WLF

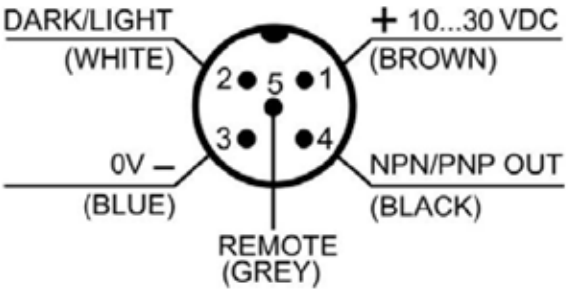

READING DIAGRAMS

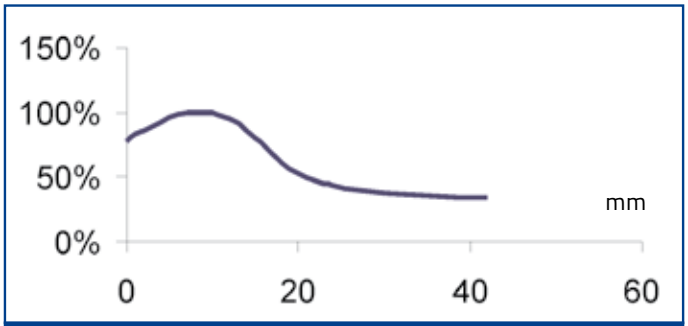

Standard 9 mm lens
(1.5 x 5 mm spot on focal point)

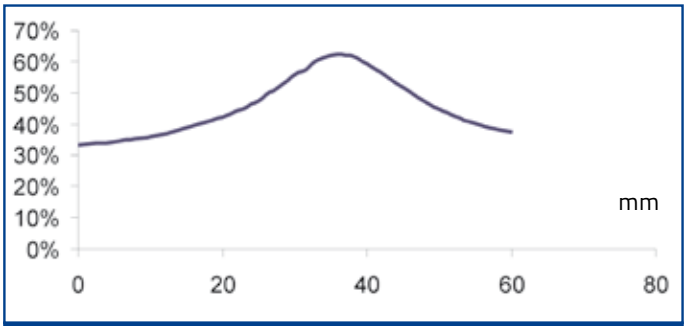

Accessory 28 mm lens
(2 x 9 mm spot on focal point)

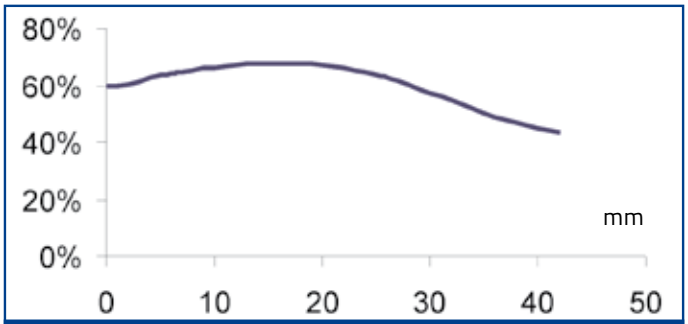

Accessory 18 mm lens
(2 x 7 mm spot on focal point)

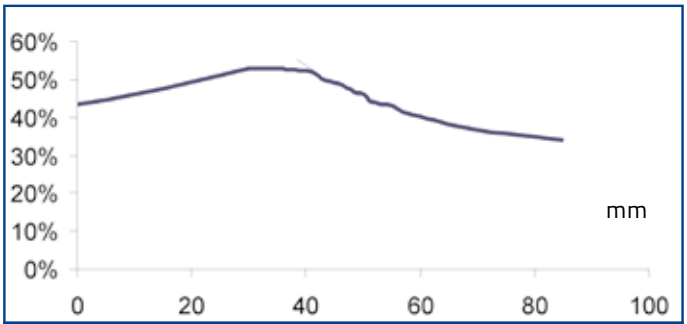

Accessory 40 mm lens
(2.5 x 11 mm spot on focal point)

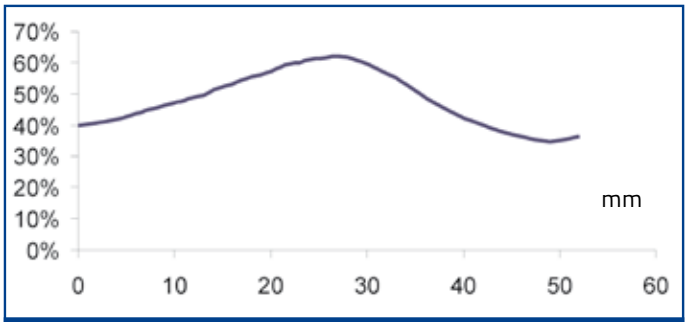

Accessory 22 mm lens
(2 x 8 mm spot on focal point)

VERTICAL SPOT

HORIZONTAL SPOT

Horizontal spot is present in the TL46 models with final '-L' suffix

MODEL SELECTION AND ORDER INFORMATION

OPTIC FUNCTION	SETTING & INDICATORS	EMISSION	OUTPUT	MODEL	ORDER No.
Contrast sensor	Trimmer 2 LEDs	WHITE vertical spot	PNP	TL46-A-415	954601070
			NPN	TL46-A-425	954601080
		RED vertical spot	PNP	TL46-A-615	954601090
			NPN	TL46-A-625	954601100
	Push-buttons 2 LEDs	R.G.B. vertical spot	PNP/NPN	TL46-W-815	954601000
		R.G.B. horizontal spot		TL46-W-815L	954601010
	Push buttons 4 LEDs bargraph	R.G.B. vertical spot		TL46-WL-815	954601020
		R.G.B. horizontal spot		TL46-WL-815L	954601030
	Push buttons 4 LEDs display	R.G.B. vertical spot		TL46-WLF-815	954601040
		R.G.B. horizontal spot		TL46-WLF-815L	954601050
		R.G.B. vertical spot	PNP	TL46-WJ-815	954601110
		R.G.B. horizontal spot		TL46-WJ-815L	954601120

ACCESSORIES

9 mm PMMA

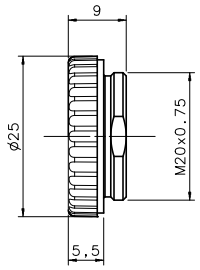

9 mm

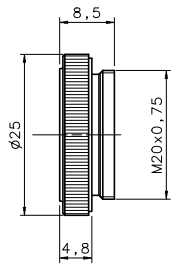

HI-RES LENS

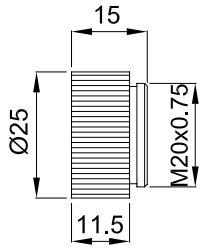

18 mm LENS

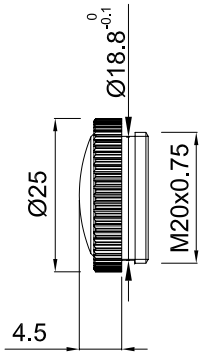

22 mm LENS

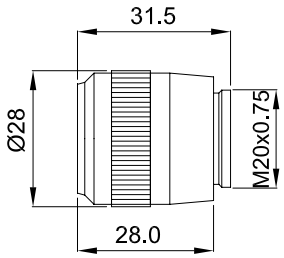

28 mm LENS

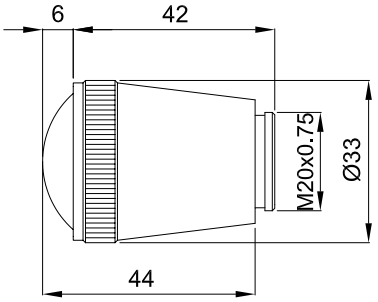

40 mm LENS

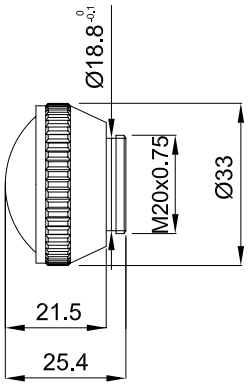

MODEL	DESCRIPTION	ORDER No.
Lens No.9	glass lens with 9 mm focus	95ACC2670
Lens No.9 PMMA	plastic lens with 9 mm focus	95ACC2540
Lens Hi-Res	additional focussing glass lens with 9 mm focus (*)	95ACC1050
Lens No.18	glass lens with 18 mm focus	95ACC2680
Lens No.22	glass lens with 22 mm focus	95ACC1100
Lens No.28	glass lens with 28 mm focus	890000194
Lens No.40	glass lens with 40 mm focus	95ACC2740

* focussing lens to screw between the sensor and the normal 9 mm lens

CABLES

TYPE	DESCRIPTION	LENGTH	MODEL	ORDER No.
Axial M12 Connector	5-pole, grey, P.V.C.	3 m	CS-A1-03-G-03	95ACC2110
		5 m	CS-A1-03-G-05	95ACC2120
		10 m	CS-A1-03-G-10	95ACC2140
	5-pole, U.L., black, P.V.C	3 m	CS-A1-03-U-03	95ASE1170
		5 m	CS-A1-03-U-05	95ASE1180
		10 m	CS-A1-03-U-10	95ASE1190
		15 m	CS-A1-03-U-15	95ASE1200
		25 m	CS-A1-03-U-25	95ASE1210
		50 m	CS-A1-03-U-50	95A252700